EWL
03/28/18

STEEL STRENGTH IN TENSION

ACI 318-11, § D.5.1

$N_{sa} = n A_{se,N} f_{uta}$

$= (1)(0.226\ in^2)(100\ ksi)$

$= \underline{22{,}600\ lb}$

$\phi N_{sa} = 0.75(22{,}600\ lb)$

$= \underline{\underline{17{,}000\ lb}}$

CONCRETE BREAKOUT STRENGTH IN TENSION

ACI 318-11, § D.5.2

ASSUME: CRITICAL EDGE DISTANCE (12").

CRACKED CONCRETE ($k_{cr} = 17$).

$f'_c = 3000$ psi (N.W.)

$$N_{cb} = \frac{A_{Nc}}{A_{Nco}} (\psi_{ed,N})(\psi_{c,N})(\psi_{cp,N}) N_b$$

$A_{Nc} = A_{Nco} = 9 h_{ef}^2 = 9(8")^2 = \underline{576\ in^2}$

$\psi_{ed,N} = 1.0$ ($c_{a,min} \geq 1.5 h_{ef} = 12"$)

$\psi_{c,N} = 1.0$ (CRACKED CONC.)

$\psi_{cp,N} = 1.0$

(CONT'D)

EWL
03/28/18

CONCRETE BREAKOUT IN TENSION (CONT'D)

$$N_b = k_c \lambda \sqrt{f'_c}\, h_{ef}^{1.5}$$
$$= 17(1.0)\sqrt{3000\text{ psi}}\,(8'')^{1.5}$$
$$= 21{,}000\text{ lb}$$

$$\therefore N_{cb} = 1.0(1.0)(1.0)(1.0)(21{,}000\text{ lb})$$
$$= \underline{21{,}000\text{ lb}}$$

$$\phi N_{cb} = 0.65(21{,}000\text{ lb}) = \underline{14{,}000\text{ lb}}\ \text{(NON-SEISMIC)}$$

$$0.75\,\phi N_{cb} = 0.75(14{,}000\text{ lb}) = \underline{10{,}000\text{ lb}}\ \text{(SEISMIC)}$$

PULL-OUT STRENGTH IN TENSION

ACI 318-11, §D.5.3

NOT APPLICABLE. ONLY APPLIES TO CAST-IN HEADED AND HOOKED ANCHORS (§RD.5.3.2).

TENSION CAPACITY CONTROLLED BY CONC. BREAKOUT.

$\therefore$ NOMINAL TENSION CAPACITY = $\underline{21{,}000\text{ lb}}$ (NON-SEISMIC)

= $\underline{16{,}000\text{ lb}}$ (SEISMIC)

DESIGN TENSION CAPACITY = $\underline{14{,}000\text{ lb}}$ (NON-SEISMIC)

= $\underline{10{,}000\text{ lb}}$ (SEISMIC)

EWL
03/28/18

STEEL STRENGTH IN SHEAR

ACI 318-11, § D.6.1

PRE-SET CONFIGURATION

$V_{sa} = \underline{13{,}560 \text{ lb}}$ (ESR-2705, TABLE 3)

$\phi V_{sa} = 0.65(13{,}560 \text{ lb})$

$= \underline{\underline{8{,}800 \text{ lb}}}$

CONCRETE BREAK-OUT STRENGTH IN SHEAR

ACI 318-11, § D.6.2

$$V_{cb} = \frac{A_{Vc}}{A_{Vco}} \psi_{ed,V} \psi_{c,V} \psi_{h,V} V_b$$

ASSUME: CRITICAL EDGE DISTANCE (12")

$c_{a2} \geq 1.5 c_{a1}$

$A_{Vc} = A_{Vco} = 4.5(c_{a1})^2 = 4.5(12")^2 = \underline{648 \text{ in}^2}$

$\psi_{ed,V} = \underline{1.0}$ (NO EDGE EFFECTS)

$\psi_{c,V} = \underline{1.0}$ (CRACKED CONC. W/ NO SUPP. REINF. OR EDGE REINF.)

$\psi_{h,V} = \underline{1.0}$ ($h_a \geq 1.5 c_{a1} = 18"$)

EWL
03/28/18

CONC. BREAKOUT IN SHEAR (CONT'D)

$$V_b = \left(7\left(\frac{l_e}{d_a}\right)^{0.2}\sqrt{d_a}\right)\lambda_a\sqrt{f'_c}\,(c_{a1})^{1.5}$$

$$= \left(7\left(\frac{5.8''}{1''}\right)^{0.2}\sqrt{1''}\right)(1.0)\sqrt{3000\text{ psi}}\,(12'')^{1.5}$$

$$= \underline{23{,}000\text{ lb}}$$

$$\therefore V_{cb} = (1.0)(1.0)(1.0)(1.0)(23{,}000\text{ lb})$$

$$= \underline{\underline{23{,}000\text{ lb}}}$$

$$\phi V_{cb} = 0.70\,(23{,}000\text{ lb})$$

$$= \underline{\underline{16{,}000\text{ lb}}} \quad \text{(NON SEISMIC)}$$

$$0.75\,\phi V_{cb} = 0.75\,(16{,}000\text{ lb}) = \underline{\underline{12{,}000\text{ lb}}} \quad \text{(SEISMIC)}$$

CONCRETE PRYOUT IN SHEAR

ACI 318-11, § D.6.3

$$V_{cp} = K_{cp} N_{cb}$$

$$= 2.0\,(21{,}000\text{ lb})$$

$$= \underline{\underline{42{,}000\text{ lb}}}$$

$$\phi V_{cp} = 0.70\,(42{,}000\text{ lb})$$

$$= \underline{\underline{29{,}000\text{ lb}}} \quad \text{(NON SEISMIC)}$$

$$0.75\,\phi V_{cp} = 0.75\,(29{,}000\text{ lb}) = \underline{\underline{22{,}000\text{ lb}}} \quad \text{(SEISMIC)}$$

EWL
03/28/18

SHEAR CAPACITY CONTROLLED BY STEEL STRENGTH IN SHEAR.

$V_{sa} = \underline{\underline{13{,}560 \text{ lb}}}$

$\phi V_{sa} = \underline{\underline{8{,}800 \text{ lb}}}$ (NON-SEISMIC OR SEISMIC)

EWL
03/28/18

PA-EX APPLICATION

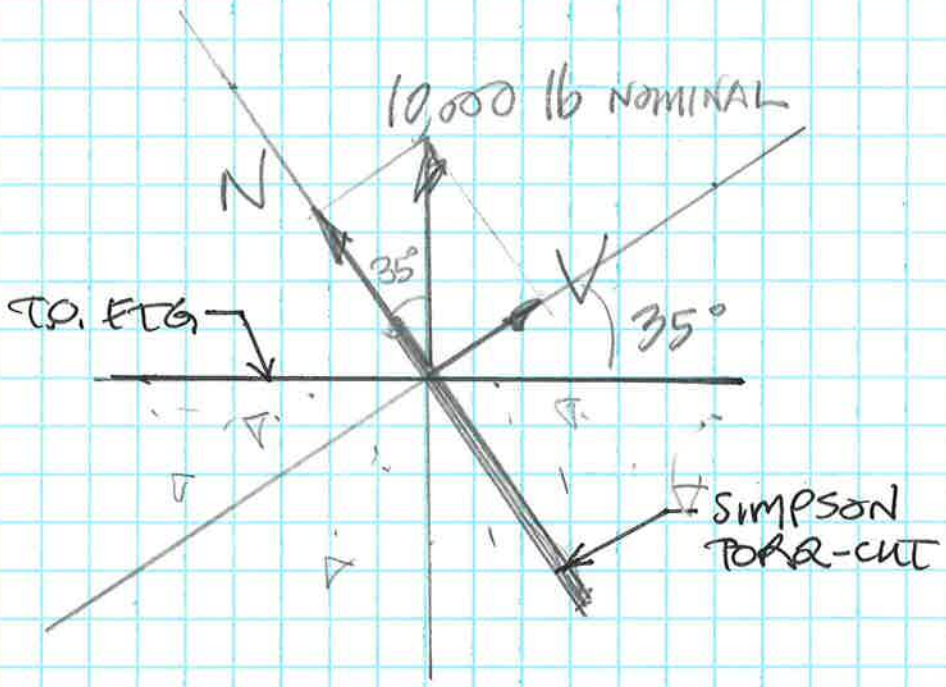

$$\cos 35° = \frac{N}{10{,}000\ lb} \longrightarrow N = \underline{8{,}200\ lb}$$

$$\sin 35° = \frac{V}{10{,}000\ lb} \longrightarrow V = \underline{5{,}700\ lb}$$

NOMINAL CAPACITY NEEDED FOR EACH COMPONENT

SEISMIC TENSION NOMINAL CAPACITY — 16,000 lb ≥ 8,200 lb (51%) OK

SEISMIC SHEAR NOMINAL CAPACITY — 8,800 lb ≥ 5,700 lb (65%) OK

(CONT'D)

EWL
03/28/18

PA-EX APPLICATION (CONT'D)

COMBINED TENSION & SHEAR

ACI 318-11, §D.7

$$\frac{N}{N_n} + \frac{V}{V_n} \leq 1.2$$

$$0.51 + 0.65 = \underline{1.16} \leq 1.2 \quad \text{OK}$$

OK TO USE 5/8" ϕ SIMPSON TORQ-CUT SELF-UNDERCUTTING ANCHOR W/ CONNECT-EZ PA-EX

REQUIREMENTS:

1. $f'_c \geq 3000$ psi. (NORMAL WEIGHT)
2. EDGE DISTANCE ≥ 12"
3. FOOTING (CONCRETE) THICKNESS ≥ 18"
4. MIN. NOMINAL EMBEDMENT DEPTH = 9½"
5. PRE-SET CONFIGURATION OR THROUGH-SET CONFIGURATION.

TABLE 1—TORQ-CUT™ ANCHOR INSTALLATION INFORMATION AND ANCHOR DATA[1]

CHARACTERISTIC	SYMBOL	UNITS	NOMINAL ANCHOR DIAMETER (inch)		
			½	5/8	3/4
Installation Information					
Nominal Anchor Diameter	d_a (d_0)[3]	in.	½	5/8	3/4
Drill Bit Diameter	d	in.	7/8	1	1 1/4
Pre-Set Anchor Base plate Clearance Hole Diameter Range[2]	d_c	in. (mm)	9/16 – 3/4 (14.3 – 19.1)	11/16 – 7/8 (17.5 – 22.2)	13/16 – 1 1/8 (20.6 – 28.6)
Through-Set Anchor Base plate Minimum Clearance Hole Diameter[2]	d_c	in. (mm)	15/16 (23.8)	1 1/16 (27.0)	1 5/16 (33.3)
Installation Torque	T_{inst}	ft-lbf (N-m)	90 (122)	185 (250)	240 (325)
Minimum Overall Depth of Drilled Hole	h_{hole}	in. (mm)	7 3/8 (187)	10 (254)	12 1/2 (318)
Minimum Nominal Embedment Depth	h_{nom}	in. (mm)	7 (178)	9 1/2 (241)	12 (305)
Minimum Effective Embedment Depth	h_{ef}	in. (mm)	5 3/4 (146)	8 (203)	10 1/4 (260)
Critical Edge Distance	c_{ac}	in. (mm)	8 5/8 (219)	12 (305)	15 3/8 (390)
Minimum Edge Distance	c_{min}	in. (mm)	7 (178)	10 (254)	7 3/4 (197)
Minimum Spacing	s_{min}	in. (mm)	7 (178)	9 (229)	7 3/4 (197)
Minimum Concrete Thickness	h_{min}	in.	h_{ef} +2 7/8	h_{ef} +4	h_{ef} +5 1/8
Setting Tool Designation	-	-	TCAST50	TCAST62	TCAST75
Anchor Data					
Specified Yield Strength of Anchor Steel	f_{ya}	ksi (MPa)	80 (552)	80 (552)	80 (552)
Specified Tensile Strength of Anchor Steel	f_{uta}	ksi (MPa)	100 (689)	100 (689)	100 (689)
Effective Tensile and Shear Stress Area	A_{se}	in^2 (mm^2)	0.142 (91.6)	0.226 (146)	0.334 (215)
Axial Stiffness in Service Load Range—Uncracked Concrete	min β_{uncr}	lb/in. (N/mm)	321,000 (56,216)		
	max β_{uncr}	lb/in. (N/mm)	837,000 (146,581)		
Axial Stiffness in Service-Load Range – Cracked Concrete	min β_{cr}	lb/in. (N/mm)	198,000 (34,675)		
	max β_{cr}	lb/in. (N/mm)	504,000 (88,264)		

For **SI:** 1 inch = 25.4 mm, 1 ft-lbf = 1.356 N-m, 1 ksi = 6.89 MPa, 1 inch^2 = 645 mm^2, 1 lb/in = 0.175 N/mm.

[1]The information presented in this table is to be used in conjunction with the design criteria of ACI 318-14 Chapter 17 or ACI 318-11 Appendix D.
[2]The clearance must comply with applicable code requirements for the connected element.
[3]The notation in parentheses is for the 2006 IBC.

TABLE 2—TORQ-CUT™ ANCHOR TENSION STRENGTH DESIGN DATA[1]

CHARACTERISTIC	SYMBOL	UNITS	NOMINAL ANCHOR DIAMETER (inch)		
			$^1/_2$	$^5/_8$	$^3/_4$
Anchor Category	1, 2 or 3	—	1	1	1
Minimum Nominal Embedment Depth	h_{nom}	in. (mm)	7 (178)	$9^1/_2$ (241)	12 (305)
Steel Strength in Tension (ACI 318-14 Section 17.4.1 or ACI 318-11 Section D.5.1)					
Steel Strength in Tension	N_{sa}	lbf (kN)	14,190 (63.1)	22,600 (100.5)	33,450 (148.8)
Strength Reduction Factor-Steel Failure[2]	ϕ_{sa}	—	0.75	0.75	0.75
Concrete Breakout Strength in Tension (ACI 318-14 Section 17.4.2 or ACI 318-11 Section D.5.2)					
Minimum Effective Embedment Depth	h_{ef}	in. (mm)	$5^3/_4$ (146)	8 (203)	$10^1/_4$ (260)
Critical Edge Distance	c_{ac}	In (mm)	$8^5/_8$ (219)	12 (305)	$15^3/_8$ (391)
Effectiveness Factor-Uncracked Concrete	k_{uncr}	—	24	24	24
Effectiveness Factor-Cracked Concrete	k_{cr}	—	21	17	21
Modification Factor for Uncracked Concrete	$\psi_{c,N}$	—	1.00[5]	1.00[5]	1.00[5]
Strength Reduction Factor-Concrete Breakout Failure[3]	ϕ_{cb}	—	0.65	0.65	0.65
Pull-Out Strength in Tension (ACI 318-14 Section 17.4.3 or ACI 318-11 Section D.5.3)					
Pull-Out Strength Uncracked Concrete[4]	$N_{p,uncr}$	lbf	N/A	N/A	N/A
Pull-Out Strength Cracked Concrete[4]	$N_{p,cr}$	lbf	N/A	N/A	N/A
Strength Reduction Factor-Pullout Failure[4]	ϕ_p	—	0.65	0.65	0.65
Tension Strength for Seismic Applications (ACI 318-14 Section 17.2.3.3 or ACI 318-11 Section D.3.3.3)					
Tension Strength of Single anchor for Seismic Loads[6]	$N_{p,eq}$	lbf	N/A	N/A	N/A
Strength Reduction Factor-Steel Failure[2]	ϕ_{eq}	—	0.75	0.75	0.75

For **SI:** 1 inch = 25.4 mm, 1 lbf = 4.45 N.

[1]The information presented in this table must be used in conjunction with the design criteria of ACI 318-14 Chapter 17 or ACI 318-11 Appendix D.

[2]The tabulated values of ϕ_{sa} and ϕ_{eq} apply when the load combinations of Section 1605.2 of the IBC, Section 5.3 of ACI 318-14 or Section 9.2 of ACI 318-11 are used. If the load combinations of ACI 318 Appendix C are used, the appropriate values of ϕ_{sa} and ϕ_{eq} must be determined in accordance with ACI 318-11 D.4.4(a). The anchors are ductile steel elements as defined in ACI 318-14 2.3 or ACI 318-11 D.1, as applicable.

[3]The tabulated value of ϕ_{cb} applies when both the load combinations of Section 1605.2 of the IBC, ACI 318-14 Section 5.3 or ACI 318-11 Section 9.2 are used and the requirements of ACI 318-14 17.3.3(c) or ACI 318-11 D.4.3(c), as applicable, for Condition B are met. Condition B applies where supplementary reinforcement is not provided in the concrete. For installations where complying reinforcement can be verified, the ϕ_{cb} factors described in ACI 318-14 17.3.3(c) or ACI 318-11 D.4.3(c), as applicable, may be used for Condition A. If the load combinations of ACI 318 Appendix C are used, the appropriate value of ϕ_{cb} must be determined in accordance with ACI 318-11 D.4.4(c).

[4]See Section 4.1.4 of this report.

[5]For all design cases, $\psi_{c,N}$ = 1.0. The appropriate effectiveness factor for cracked concrete (k_{cr}) or uncracked concrete (k_{uncr}) must be used in the calculations.

[6]See Section 4.1.8.2 of this report.

TABLE 3—TORQ-CUT™ ANCHOR SHEAR STRENGTH DESIGN DATA[1]

CHARACTERISTIC	SYMBOL	UNITS	NOMINAL ANCHOR DIAMETER (inch)		
			1/2	5/8	3/4
Anchor Category	1, 2 or 3	—	1	1	1
Minimum Nominal Embedment Depth	h_{nom}	in. (mm)	7 (178)	9½ (241)	12 (305)
Steel Strength in Shear (ACI 381-14 Section 17.5.1 or ACI 318-11 Section D.6.1)					
Pre-set Configuration Shear Resistance of Steel	V_{sa}	lbf (kN)	8,515 (37.9)	13,560 (60.3)	20,070 (89.3)
Through-set Configuration Shear Resistance of Steel	V_{sa}	lbf (kN)	26,065 (115.9)	38,720 (172.2)	49,235 (219.0)
Strength Reduction Factor-Steel Failure[2]	ϕ_{sa}	—	0.65	0.65	0.65
Concrete Breakout Strength in Shear (ACI 318-14 Section 17.5.2 or ACI 318-11 Section D.6.2)					
Outside Diameter	d_a (d_o)[4]	in. (mm)	7/8 (22)	1 (25.4)	1 1/4 (31.7)
Load Bearing Length of Anchor in Shear	ℓ_e	in. (mm)	4.3 (109)	5.8 (147)	7.5 (191)
Strength Reduction Factor-Concrete Breakout Failure[3]	ϕ_{cb}	—	0.70	0.70	0.70
Concrete Pryout Strength in Shear (ACI 318-14 Section 17.5.3 or ACI 318-11 Section D.6.3)					
Coefficient for Pryout Strength	k_{cp}	—	2.0	2.0	2.0
Strength Reduction Factor-Concrete Pryout Failure[3]	ϕ_{cp}	—	0.70	0.70	0.70
Steel Strength in Shear for Seismic Applications (ACI 318-14 Section 17.2.3.3 or ACI 318-11 Section D.3.3.3)					
Pre-set Configuration Shear Strength of Single Anchor for Seismic Loads	$V_{sa,eq}$	lbf (kN)	8,515 (37.9)	13,560 (60.3)	20,070 (89.3)
Through-set Configuration Shear Strength of Single Anchor for Seismic Loads	$V_{sa,eq}$	lbf (kN)	15,640 (69.6)	30,975 (137.8)	44,310 (197.1)
Strength Reduction Factor-Steel Failure[2]	ϕ_{eq}	—	0.65	0.65	0.65

For **SI:** 1 inch = 25.4 mm, 1 lbf = 4.45 N.

[1]The information presented in this table must be used in conjunction with the design criteria of ACI 318-14 Chapter 17 or ACI 318-11 Appendix D.

[2]The tabulated values of ϕ_{sa} and ϕ_{eq} apply when the load combinations of Section 1605.2 of the IBC or ACI 318-14 Section 5.3 or ACI 318-11 Section 9.2, as applicable, are used. If the load combinations of ACI 318 Appendix C are used, the appropriate value of ϕ_{sa} and ϕ_{eq} must be determined in accordance with ACI 318-11 D.4.4(a). The anchors are ductile steel elements as defined in ACI 318-14 2.3 or ACI 318-11 D.1, as applicable.

[3] The tabulated value of ϕ_{cb} applies when both the load combinations of Section 1605.2 of the IBC, ACI 318-14 Section 5.3 or ACI 318-11 Section 9.2 are used and the requirements of ACI 318-14 17.3.3(c) or ACI 318-11 D.4.3(c), as applicable, for Condition B are met. Condition B applies where supplementary reinforcement is not provided in the concrete. For installations where complying reinforcement can be verified, the ϕ_{cb} factors described in ACI 318-14 17.3.3(c) or ACI 318-11 D.4.3(c), as applicable, can be used for Condition A. If the load combinations of ACI 318 Appendix C are used, the appropriate value of ϕ_{cb} must be determined in accordance with ACI 318-11 D.4.4(c).

[4]The notation in parenthesis is for the 2006 IBC.

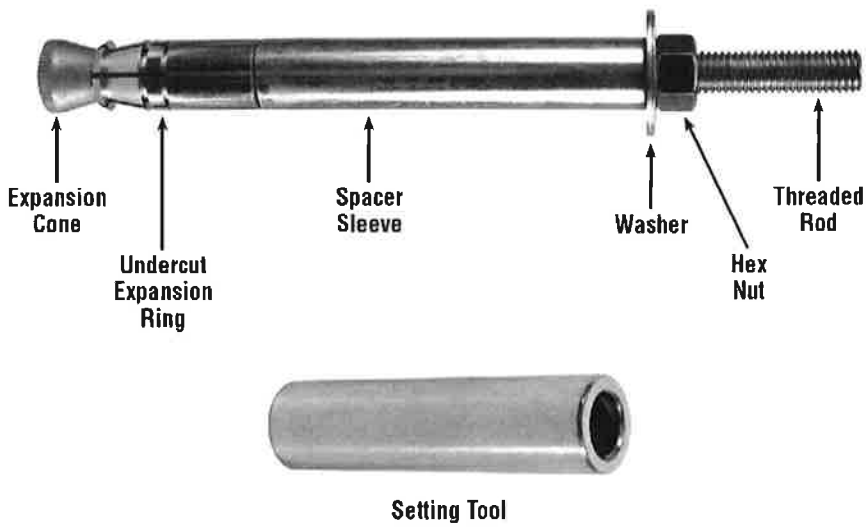

FIGURE 1—TORQ-CUT™ ANCHOR AND SETTING TOOL ILLUSTRATION

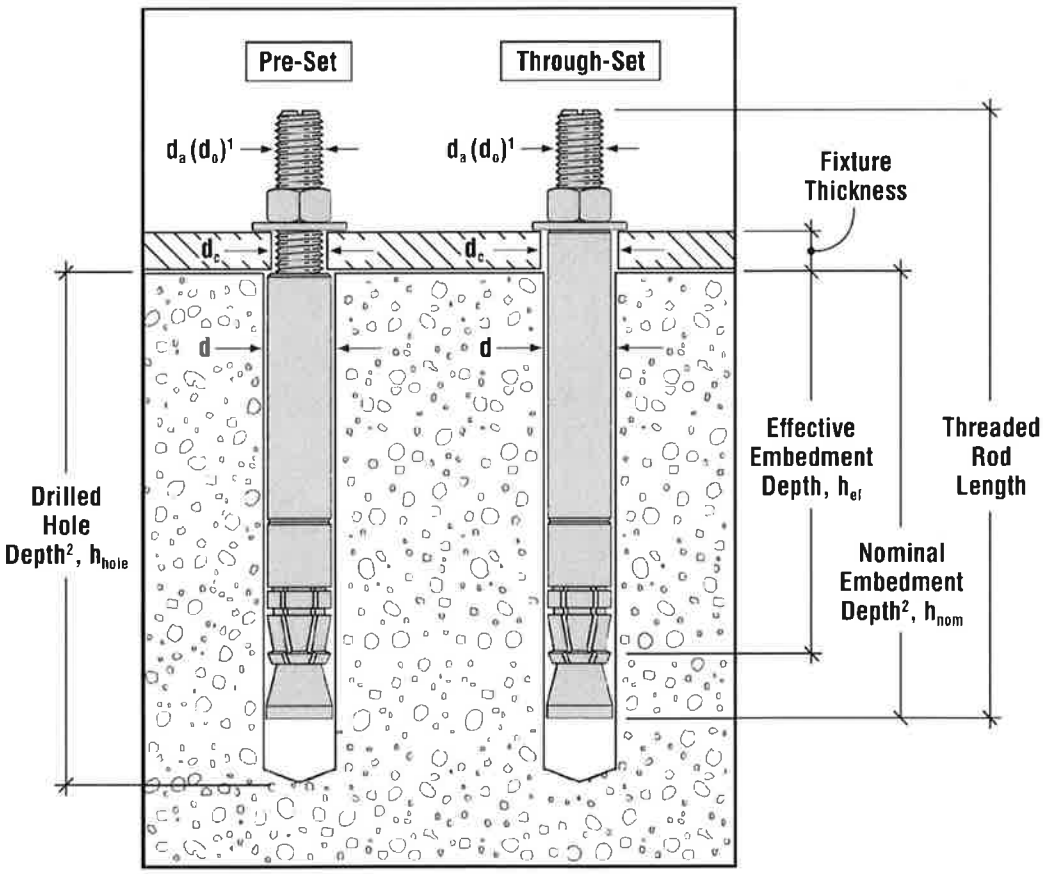

1. The notation in parentheses is for the 2006 IBC.
2. The drilled hole depth is ½" greater than the nominal embedment depth.

FIGURE 2—TORQ-CUT™ ANCHOR INSTALLATION INFORMATION